APS013 APPLICATION NOTE

The implementation of two-way ranging with the DW1000

Version 2.4

This document is subject to change without notice

© 2024 Qorvo, US, Inc. – All Rights Reserved

TABLE OF CONTENTS

LIST OF TABLES **2**

LIST OF FIGURES **2**

1 INTRODUCTION **3**

1.1 DW1000 BASED TWR 3

2 IMPLEMENTATION OF RANGING **5**

2.1 DISCOVERY PHASE 5
2.2 RANGING PHASE 5
2.3 MESSAGES USED IN RANGING 6
2.3.1 General ranging frame format *6*
2.3.2 Blink frame format *8*
2.3.3 Poll message *8*
2.3.4 Response message *8*
2.3.5 Final message *8*
2.3.6 Ranging Initiation message *9*
2.4 TWR OPTIMISATION FOR POWER CONSUMPTION 9
2.4.1 Discovery phase *9*
2.4.2 Ranging phase *11*

3 CONCLUSION **13**

4 REFERENCES **13**

5 DOCUMENT HISTORY **13**

6 MAJOR CHANGES **13**

7 FURTHER INFORMATION **15**

LIST OF TABLES

TABLE 1: FIELDS WITHIN THE RESPONSE MESSAGE 8
TABLE 2: FIELDS WITHIN THE FINAL MESSAGE 9
TABLE 3: FIELDS WITHIN THE RANGING INITIATION MESSAGE 9
TABLE 4: TABLE OF REFERENCES 13
TABLE 5: DOCUMENT HISTORY 13

LIST OF FIGURES

FIGURE 1: TWO-WAY RANGING CONCEPT 3
FIGURE 2: ASYMMETRIC TWR TOF FORMULA 4
FIGURE 3: DISCOVERY AND RANGING PHASE MESSAGE EXCHANGES 5
FIGURE 4: GENERAL RANGING FRAME FORMAT 7
FIGURE 5: RANGING MESSAGE ENCODINGS 8
FIGURE 6: TWR DISCOVERY PHASE TIMING PROFILE 10
FIGURE 7: TWR RANGING PHASE TIMING PROFILE 12

© 2024 Qorvo, US, Inc. – All Rights Reserved

1 INTRODUCTION

In this application note two-way ranging (TWR) scheme as used by Decawave's example application (*DecaRanging*) is described. TWR is a basic concept to calculate the distance between two objects by determining the time of flight (TOF) of signals travelling between them.

The distance between the objects may be calculated using the formula,

$$Distance = Speed\ of\ radio\ waves \times TOF$$

The DW1000 uses mathematical and electronic techniques to implement a very precise clock. By recording the state of this clock when certain events occur during DW1000 transmission and reception of the radio wave signals, the DW1000 has the ability to 'timestamp' those events.

TWR has advantages over other distance measurement and locating systems in that it can be used by stand-alone devices which only have relative distances to measure. There is no requirement for an infrastructure of fixed communicating devices to determine separation distances.

1.1 DW1000 based TWR

If we use a pair of DW1000s, designated as an initiator and a responder respectively, we can describe the two-way ranging concept as follows.

The initiator transmits a radio message to the responder and records its time of transmission (transmit timestamp) t1. The responder receives the message and transmits a response (a radio message) back to the initiator after a particular delay t_{reply}. The initiator then receives this response and records a receive timestamp t2. This process is depicted in Figure 1.

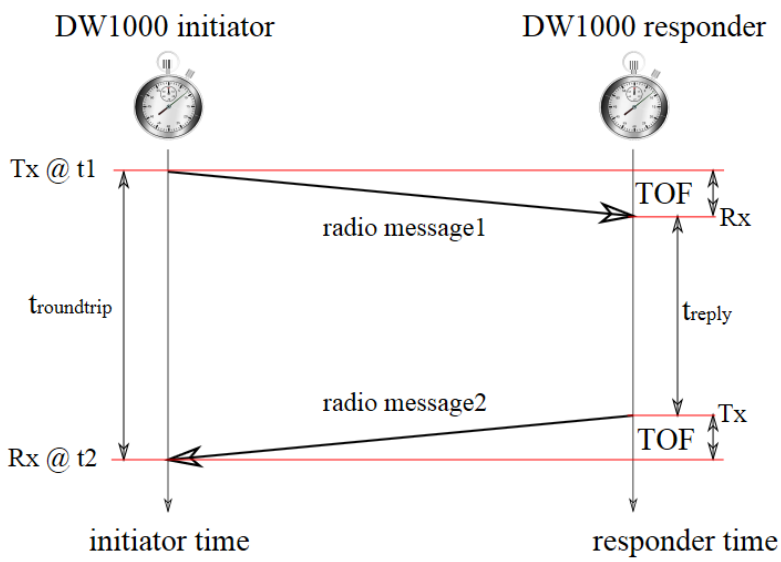

Figure 1: Two-way ranging concept

Now using the timestamps t_1 and t_2, the initiator can calculate the round trip time $t_{roundtrip}$ and knowing the reply time in the tag, t_{reply}, the TOF can be determined by,

$$TOF = \frac{t_2 - t_1 - t_{reply}}{2}$$

If we assume the speed of radio waves through air is the same as the speed of light c, then the

© 2024 Qorvo, US, Inc. – All Rights Reserved

distance between the initiator and responder can be calculated by,

$$Distance = c \times \frac{t_2 - t_1 - treply}{2}$$

In the case of tag-to-anchor two-way ranging, there are a number of sources of error due to clock drift and frequency drift [4]. Asymmetric double sided TWR method is used in Decawave's implementation. It reduces the error due to clock and frequency drift. Figure 2 shows a Poll-Response-Final method of doing TWR and it also shows the formula used for calculation of TOF.

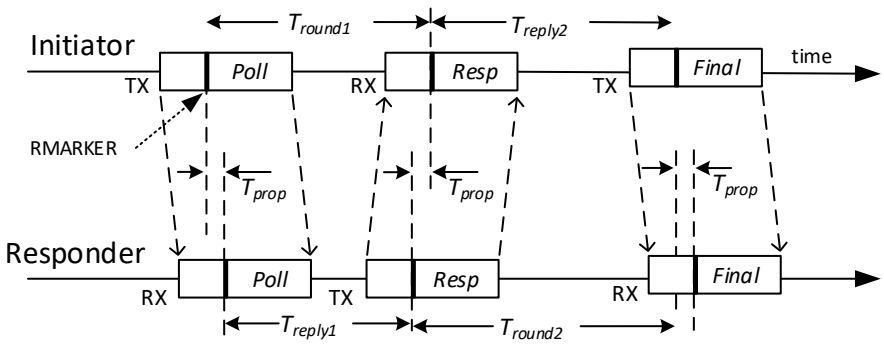

The *Final* message communicates the initiator's T_{round} and T_{reply} times to the responder, which calculates the range to the initiator as follows:

$$T_{prop} = \frac{T_{round1} \times T_{round2} - T_{reply1} \times T_{reply2}}{T_{round1} + T_{round2} + T_{reply1} + T_{reply2}}$$

Figure 2: Asymmetric TWR TOF formula

© 2024 Qorvo, US, Inc. – All Rights Reserved

2 IMPLEMENTATION OF RANGING

In Decawave's two-way ranging demo, two units operate as a pair. One unit acts as a "Tag" initiating the ranging exchange and the other unit acts as an "Anchor" listening for the tag messages and performing two-way ranging exchanges with it. This is shown in Figure 3 below.

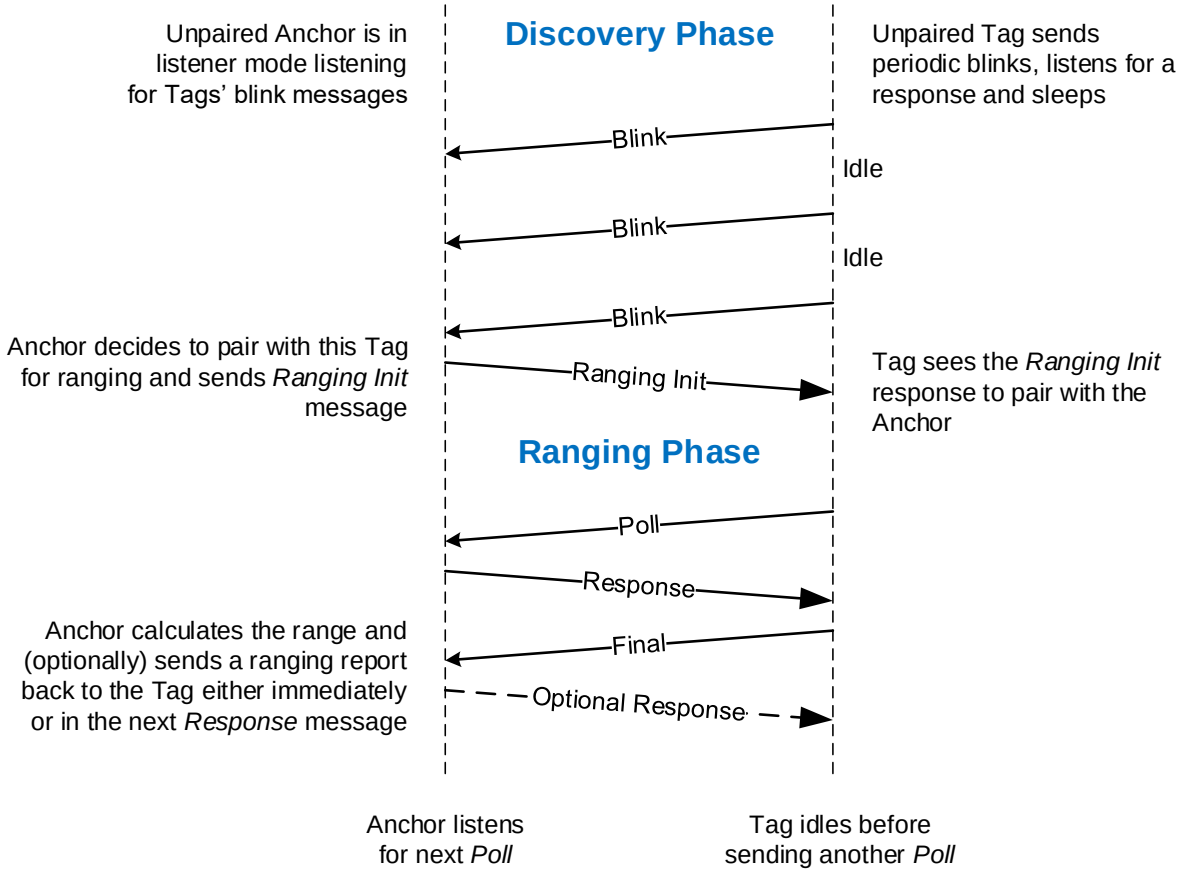

Figure 3: Discovery and Ranging phase message exchanges

2.1 Discovery phase

Initially the tag is in a discovery phase where it periodically sends a *Blink* message that contains its own address, and listens for a *Ranging Init* response from an anchor. If the tag does not get this response it sleeps for a period (default of 1 second) before blinking again. The anchor will initially listen for blinks, and when it receives a *Blink* message, the anchor will send a *Ranging Init* message to the tag, which will complete the *Discovery Phase* and enter the *Ranging Phase*.

2.2 Ranging phase

In the *Ranging Phase* the tag periodically performs two-way ranging exchanges with the anchor. Each two-way ranging exchange consists of the tag sending the *Poll message,* receiving the *Response* message and then sending the *Final* message. In the case where it is necessary for the tag to be aware of the range, the anchor may optionally send an immediate message to the tag with the calculated TOF or may wait until the next *Response* message to send a previous TOF. In either case, the tag can use the TOF to calculate the range.

For clarity, this optional message is not shown in the remainder of this document.

© 2024 Qorvo, US, Inc. – All Rights Reserved

2.3 Messages used in ranging

Five messages are employed: two in the *Discovery Phase* (the *Blink* and *Ranging Init*) and three in the *Ranging Phase* (the *Poll*, the *Response*, and the *Final*), as shown in Figure 4. Although these follow IEEE message conventions, these are not standard RTLS messages, the reader is referred to ISO/IEC 24730-62 for details of standardised message formats for use in RTLS systems based on IEEE 802.15.4-2011 UWB. The formats of the messages used in the Decawave implementation are given in the following sections.

2.3.1 General ranging frame format

The general message format, shown at the top of Figure 4, is the IEEE 802.15.4 standard encoding for a data frame. The two byte *Frame Control* octets vary between the messages as some use 8-octet (64-bit) addresses and others 2-octet (16-bit) addresses. A single 16-bit PAN ID (value 0xDECA) is used for all the messages. The only exception is the *Blink* message which is described in 2.3.2 below. In a real deployment, the PAN ID might be negotiated as part of associating with the network or it might be an installation configured constant. The blink message follows the format defined in clause *5.2.2.7 Multipurpose blink frame* of the *IEEE Std 802.15.4e™-2012 (Amendment to IEEE Std 802.15.4™-2011)*.

The sequence number octet is incremented modulo-256 for every frame sent, as per IEEE rules. The source and destination addresses are either 64-bit numbers programmed uniquely into each unit (during manufacture) or 16-bit addresses temporarily assigned. The 2-octet FCS is a CRC frame check sequence following the IEEE standard, (this can be generated automatically by the DW1000 IC and appended to the transmitted message).

© 2024 Qorvo, US, Inc. – All Rights Reserved

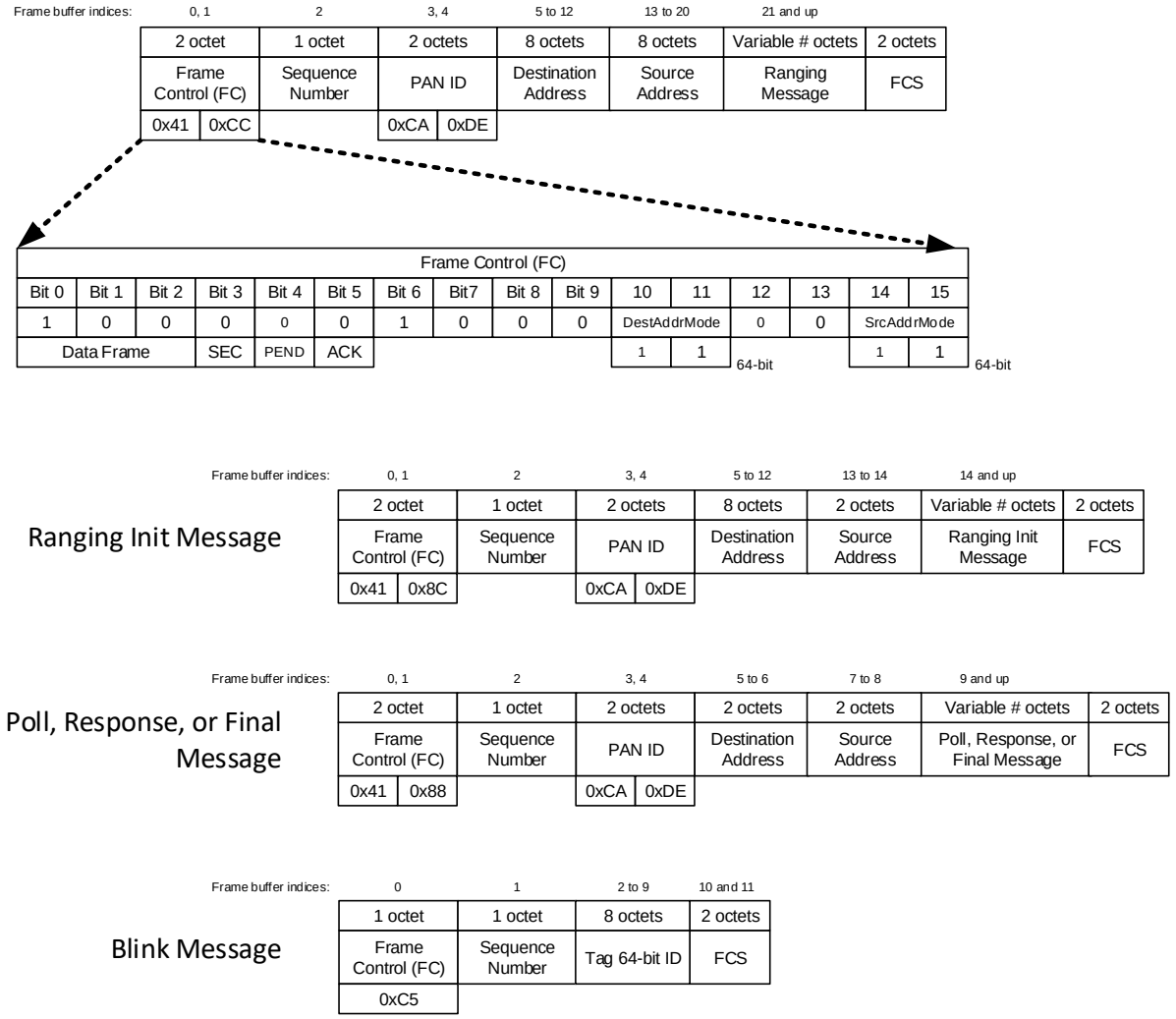

Figure 4: General ranging frame format

The content of the ranging message portion of the frame, (the “Variable # octets” part of the Poll, Response, Final and Report message shown above in Figure 4), defines which of the four ranging messages it is. We will also refer to this section of the message as the "application level payload ". These are shown in Figure 5 and described in sections 2.3.3 to 2.3.6 below. In these, only the ranging message portion of the frame is shown and discussed. This data is encapsulated in the general ranging frame format of Figure 4 to form the complete ranging message in each case.

© 2024 Qorvo, US, Inc. – All Rights Reserved

Ranging Init Message

Frame buffer indices:	9	10 to 11	12 to 13
	1 octet	2 octets	2 octets
	Function code	Tag short address	Response delay
	0x20	-	-

Poll Message

Frame buffer indices:	9
	1 octet
	Function code
	0x61

Response Message

Frame buffer indices:	9	10 to 13
	1 octet	4 octets
	Function code	Calculated Time-of-Flight
	0x50	-

Final Message

Frame buffer indices:	9	10 to 13	14 to 17
	1 octet	4 octets	4 octets
	Function code	Resp RX time – Poll TX time	Final TX time – Resp RX time
	0x69	-	-

Figure 5: Ranging message encodings

2.3.2 Blink frame format

The *Blink message* frame format is used for sending of the tag *Blink* messages. The *Blink* frame is sent without any additional application level payload, i.e. the application data field of the blink frame is zero length. The result is a 12-octet blink frame. The encoding of this minimal blink is as shown in Figure 4.

2.3.3 Poll message

The *Poll* message is sent by the tag to initiate a single range measurement. For the poll message, the ranging message portion of the frame is a single octet, with the value: 0x61.

2.3.4 Response message

The *Response* message is sent by the anchor in response to a poll message from the tag. The *Response* message is 5 octets in length. Table 1 lists and describes the individual fields within the *Response* message.

Table 1: Fields within the Response message

Octet #'s	Value	Description
1	0x50	This octet value of 0x50 identifies the message as a *Response*
2 to 5	-	This four octet field is the anchor calculated time-of-flight, representing the estimated distance between the tag and the anchor. The time units are as defined in note 1 in 2.3.5 below.

2.3.5 Final message

The *Final* message is sent by the tag after receiving the anchor's response message. The *Final* message is 9 octets in length.
Table 2 lists and describes the individual fields within the *Final* message.

© 2024 Qorvo, US, Inc. – All Rights Reserved

Table 2: Fields within the Final message

Octet #'s	Value	Description
1	0x69	This octet identifies the message as the tag "*Final*" message
2 to 5	-	This four octet field is the difference between the *Final* TX timestamp and the *Response* RX timestamp. This value is pre-calculated by the Tag software and embedded in the message. The DW1000's delayed send mechanism is used to ensure that the actual send time matches the value inserted here. The time units are defined in note 1 below.
6 to 9	-	This four octet field is the difference between the *Response* RX timestamp and the *Poll* TX timestamp. The time units are defined in note 1 below.

Note 1: The time units used are those defined in the IEEE standard and native to the DW1000, where the LSB represents 1/128 of the fundamental UWB frequency (499.2 MHz), or approximately 15.65 picoseconds.

2.3.6 Ranging Initiation message

Upon receiving the Blink message the unpaired anchor will send the Ranging Init message to the tag that has sent the Blink message.

The *Ranging Initiation* message is 5 octets in length. Table 3 lists and describes the individual fields within the *Ranging Initiation* message.

Table 3: Fields within the Ranging Initiation message

Octet #'s	Value	Description
1	0x20	This octet value of 0x20 identifies the message as a range report
2 to 3	-	This 16-bit field specifies the 16-bit address to be used by Tag for the ranging phase instead of its 64-bit address.
4 to 5	-	This 16-bit number gives the response time to be used in the following ranging exchange. The time units of this are ms.

2.4 TWR optimisation for power consumption

Minimising power consumption for a battery powered tag is an important consideration in order for the operational lifetime of the battery powered tag to be maximised. There are a number of factors to be considered here. These are described below with respect to the different stages in the ranging operation.

2.4.1 Discovery phase

To optimise power usage, while in this phase, the receiver on-time needs to be minimised. As the *Ranging Init* message is sent after a particular delay (shown in Figure 6), the tag should only turn on its receiver after this delay, and employ a receive timeout, to turn off the receiver if the ranging initiation frame does not arrive.

Figure 6 shows the time the tag spends in each of the states for the case when the anchor is using an 800 µs response time for the *Ranging Init* message.

Note: The absolute minimum response time that can be achieved would be around 200 µs, this is microprocessor dependent, it depends how quickly the microprocessor can see the completion of reception and start the transmission. However in the example in Figure 6, an 800 µs delayed response time is used. This is because when the "Smart Tx Power" option is enabled for the 6.81 Mbps data rate, only 1 frame can be transmitted in 1 ms in order comply with ETSI and FCC regulations on TX power.

© 2024 Qorvo, US, Inc. – All Rights Reserved

All times shown in Figure 6 are in microseconds (µs).

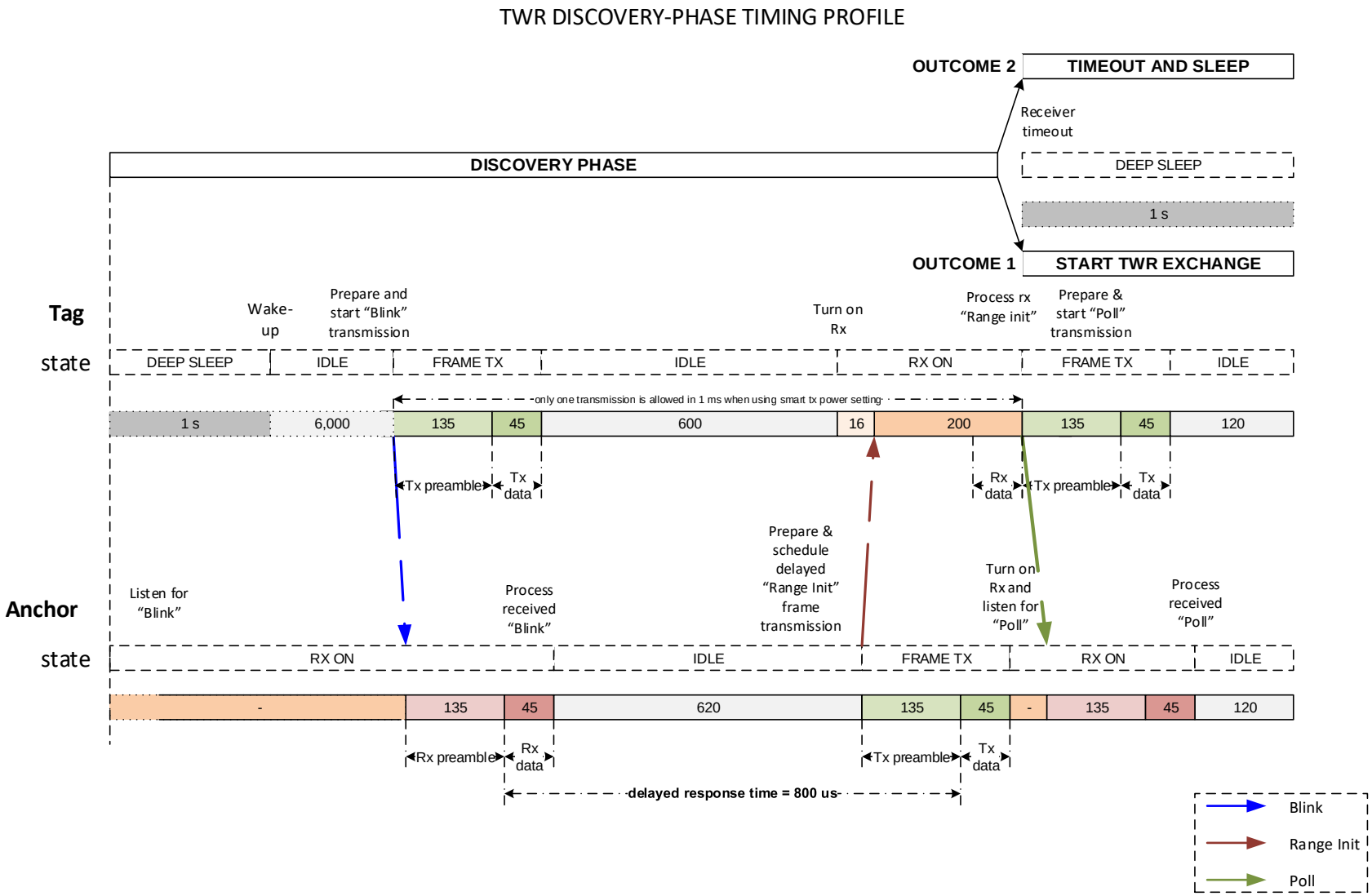

Figure 6: TWR discovery phase timing profile

© 2024 Qorvo, US, Inc. – All Rights Reserved

2.4.2 Ranging phase

To save power, in this phase, the tag needs to complete these operations as quickly as possible, and then return to low power mode (Sleep state).

In this example, to reduce the transmission, and reception times, a preamble length of 128 is used together with shortened ranging messages (section 2.3 describes the message formats), and the highest data rate of 6.81 Mbps. As a result of using this configuration the total frame transmission time is about 180 µs, and the reception time is about 215 µs. The reception time is longer because of a 16 µs receiver start-up delay, and due to the execution time of the leading edge detection search that is part of our receive time-stamping and takes up to 60 µs after SFD detection.

To reduce the time spent in the idle state, the duration of SPI transactions also need to be minimised. This is limited by the microcontroller's SPI peripheral abilities. As DW1000 supports SPI speeds of up to 20 MHz the microcontroller should be configured to run at 20 MHz if possible (We have used an STM32 device which is limited to 18 MHz). Measures should be taken to send all the bytes of an individual SPI transaction back-to-back without any dead time between them (e.g. by employing DMA on the host processor if possible). As well as the physical speed of SPI operations the application also needs to make sure that the number of SPI read and write operations are minimised (i.e. only read / write the necessary registers for the required operation).

The short response times mean that 32-bit timestamp arithmetic can be used, i.e. since 2^{32} divided by the LSB of timestamps (128 x 499.2 MHz) is 67.2 ms. This further minimises the processor execution time and saves power.

Note: The absolute minimum response time that can be achieved would be around 200 µs, this is microprocessor dependent, it depends how quickly the microprocessor can see the completion of reception and start the transmission. The anchor will respond immediately, but the tag will only send the *Final* 1 ms after the transmission of the *Poll*. This is because when the smart tx power option is enabled for a 6.81 Mbps data rate, only 1 frame can be transmitted in 1 ms to meet the ETSI / FCC regulations on transmitted power.

© 2024 Qorvo, US, Inc. – All Rights Reserved

All times shown in Figure 7 are in microseconds (µs) unless otherwise stated.

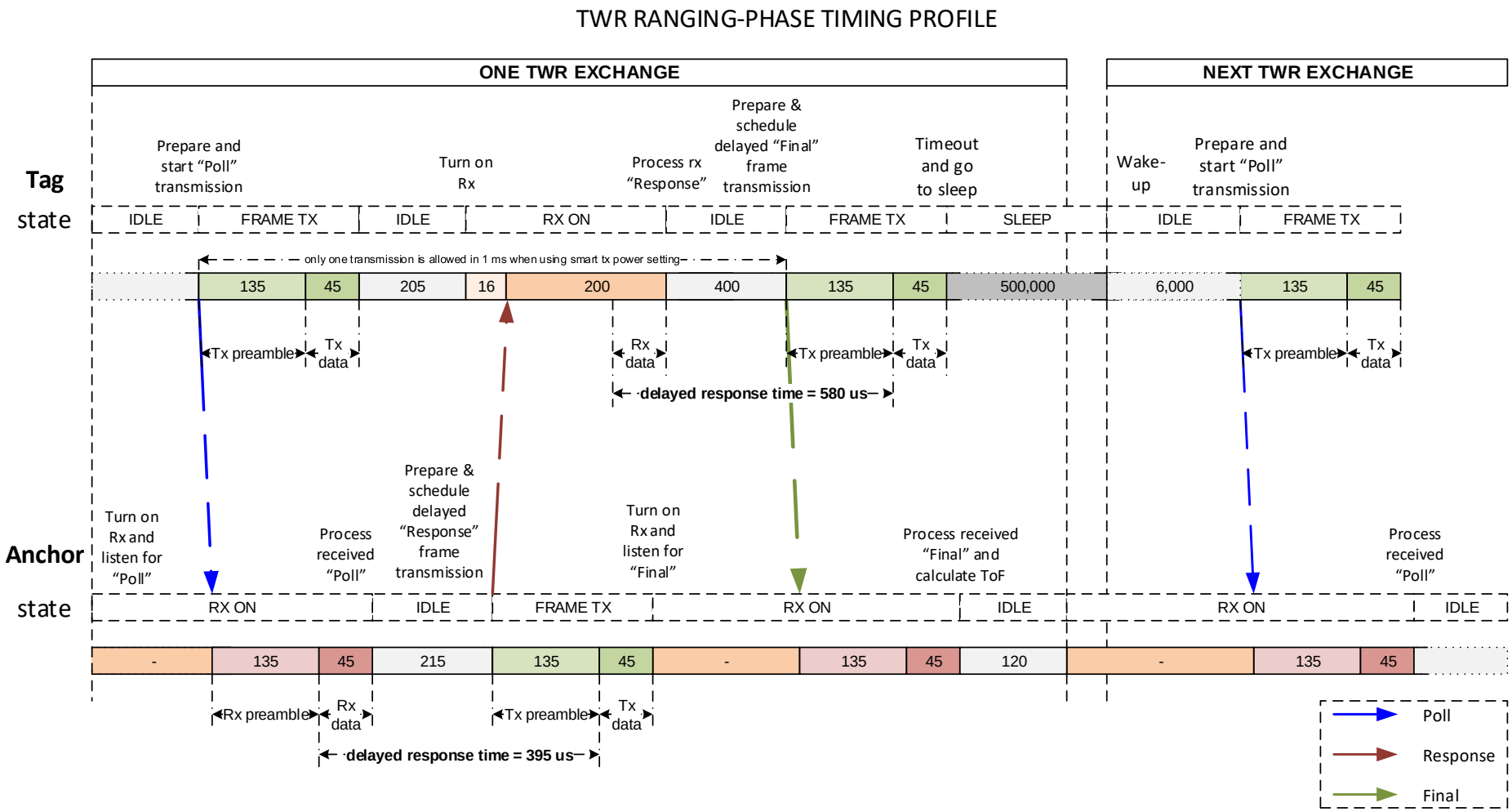

Figure 7: TWR ranging phase timing profile

© 2024 Qorvo, US, Inc. – All Rights Reserved

3 Conclusion

This application note has given an overview of two way ranging as it is implemented by Decawave in its DecaRanging application. We have also outlined optimisations that can be applied to minimise power consumption for a battery powered device.

4 References

Reference is made to the following documents in the course of this application note: -

Table 4: Table of References

Ref	Author	Version	Title
[1]	Decawave	Current	DW1000 Data Sheet
[2]	Decawave	Current	DW1000 User Manual
[3]	Decawave	Current	APS003 Real Time Location Systems
[4]	Decawave	Current	APS011 Sources of Error in DW1000 Based two-way ranging (TWR) Schemes

5 Document History

Table 5: Document History

Revision	Date	Description
1.0	15th December 2014	Initial release
1.1	31st March 2015	Scheduled update
2.0	31st December 2015	Scheduled update
2.1	30th June 2016	Scheduled update
2.2	31st March 2017	Scheduled update
2.4	17th May 2024	Scheduled update

6 Major Changes

Revision 1.0

Page	Change Description
All	Initial release

Revision 1.1

Page	Change Description
All	Change Copyright notice to 2015
1	Change revision number to 1.1
11	Fix incorrect reference
13	Add 1.1 to revision table Add this table
14	Add new page

© 2024 Qorvo, US, Inc. – All Rights Reserved

Revision 2.0

Page	Change Description
All	Updated references and page numbers
1	Change revision number to 2.0
All	Updated the text to refer to the asymmetric TWR method and related message formats and timings Update all diagrams to use the asymmetric TWR method.

Revision 2.1

Page	Change Description
All	Updated references and page numbers
All	Typographical corrections
1	Change revision number to 2.1
7	Repaired “Reference not found” error

Revision 2.2

Page	Change Description
All	Updated references and page numbers
All	Typographical corrections
1	Change revision number to 2.2
5	Modification to figure 3 to show optional response
5	Modification to explanatory text
13	Addition of v2.2 to revision history table
14	Addition of this table

Revision 2.3

Page	Change Description
All	Updated references and page numbers
1	Change revision number to 2.3
All	New Logo and template
13	Addition of v2.3 to revision history table
14	Addition of this table
15	New “Further Information”

Revision 2.4

Page	Change Description
All	Modification to footer.

© 2024 Qorvo, US, Inc. – All Rights Reserved

7 FURTHER INFORMATION

Decawave develops semiconductors solutions, software, modules, reference designs - that enable real-time, ultra-accurate, ultra-reliable local area micro-location services. Decawave's technology enables an entirely new class of easy to implement, highly secure, intelligent location functionality and services for IoT and smart consumer products and applications.

For further information on this or any other Decawave product, please refer to our website www.decawave.com.

© 2024 Qorvo, US, Inc. – All Rights Reserved